Temperature Compensated Crystal Oscillators (TCXO, VCTCXO)
Surface Mount Type TCXO KT2016 Series

KYOCERA

2.0×1.6mm

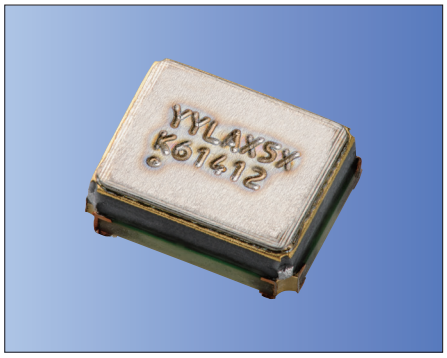

AEC-Q100/ 200 RoHS Compliant

*AEC-Q100 qualified (Option)

Features

- Miniature SMD type (2.0×1.6×0.8mm)
- Freq. temp. characteristics.
  : ±2.0×10^{-6}/ −30 to +85°C
  : ±0.5×10^{-6}/ −30 to +85°C (for GNSS)
- 1.68 to 3.63V available
- Reflow compatible
- Operating Temp. −40 to +105°C (Option)
- Disable Function (Option)

Applications

- Mobile Communications, W-LAN
- Low power radio communications
- GNSS Unit

How to Order

KT2016K 26000 □ □ □ □□ □ xx
① ② ③ ④ ⑤ ⑥ ⑦ ⑧

① Series
② Output Frequency
③ Freq. Temp. Chrst.

A	±0.5×10^{-6}
B	±1.0×10^{-6}
C	±1.5×10^{-6}
D	±2.0×10^{-6}

④ Lower Operating Temp.

C	−30°C
E	−20°C
G	−10°C

⑤ Upper Operating Temp.

W	+85°C
V	+80°C
U	+75°C

⑥ Supply Voltage

18	1.8V	28	2.8V
30	3.0V	33	3.3V

⑦ Voltage Control Function

T	TCXO
Spec. Code*	VCTCXO

*Please contact us for Spec. Code.

⑧ Individual Specification

Packaging (Tape & Reel 15000 pcs./ reel)

Specifications

Item	Symbol	Conditions	Min.	Max.	Units
Output Frequency Range	fo		10	60	MHz
Frequency Tolerance	f_tol	vs Temperature	−0.5/ −2	+0.5/ +2	×10^{-6}
		vs Load	−0.2	+0.2	
		vs Voltage	−0.2	+0.2	
Frequency Aging	f_age	Per Year	−1	+1	×10^{-6}
Storage Temperature Range	T_stg		−40	+85	°C
Operating Temperature Range	T_use		−30	+85	°C
Voltage Control Range	f_cont	Positive	±8	±15	×10^{-6}
Supply Voltage	Vcc		1.68	3.63	V
Output Level	Vpp	Clipped Sine*, Load: 10k ohm / / 10pF	0.8	—	Vp-p
Current Consumption	Icc		—	2	mA
Harmonics	—		—	−5	dBc

* : A DC-cut capacitor is not embedded in this crystal oscillator. Connect a DC-cut capacitor (≥1nF) to the line-out terminal of the oscillator.
* Please contact us for other specifications.

Dimensions

(Unit: mm)

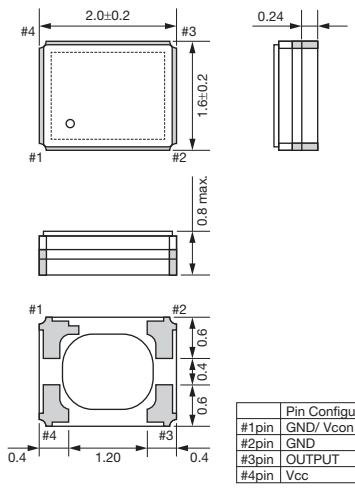

	Pin Configuration
#1pin	GND/ Vcon
#2pin	GND
#3pin	OUTPUT
#4pin	Vcc

Test Circuit

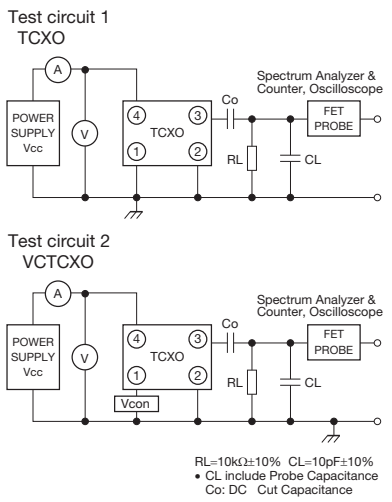

Recommended Land Pattern

(Unit: mm)

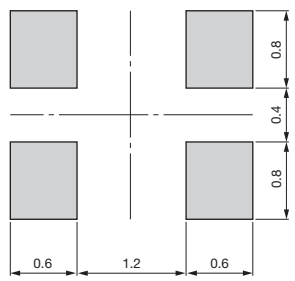

Note: A capacitor of value 0.01μF between Vcc and GND is recommended.

As of February 2019